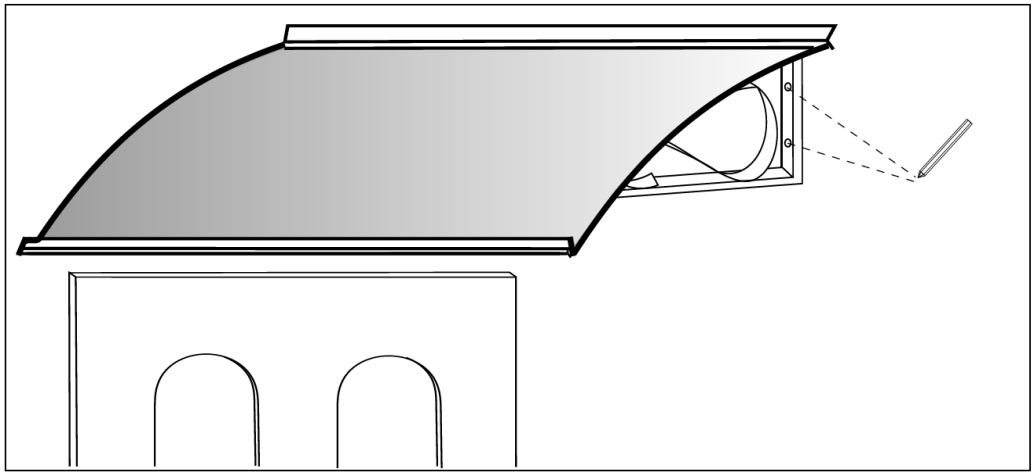

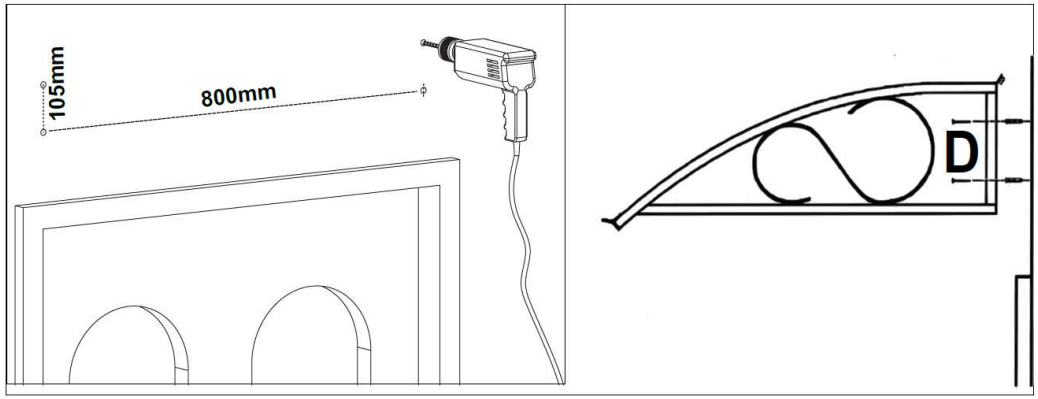
105mm
800mm
D

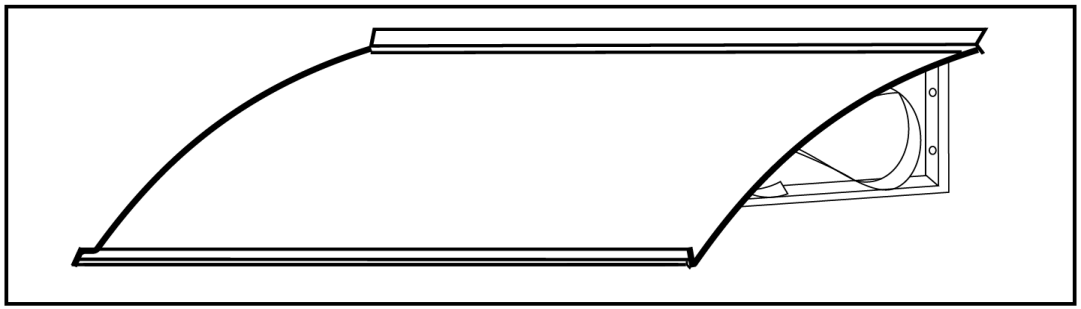

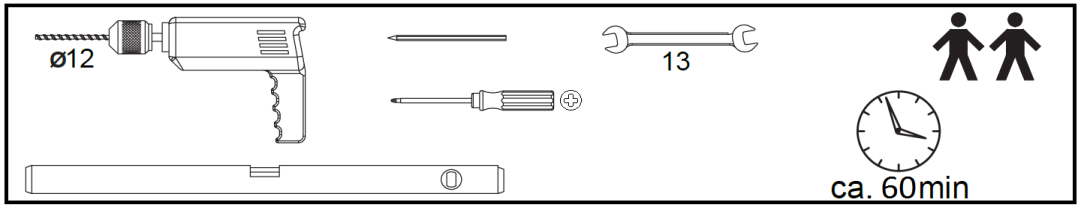
ø12
13
ca. 60min

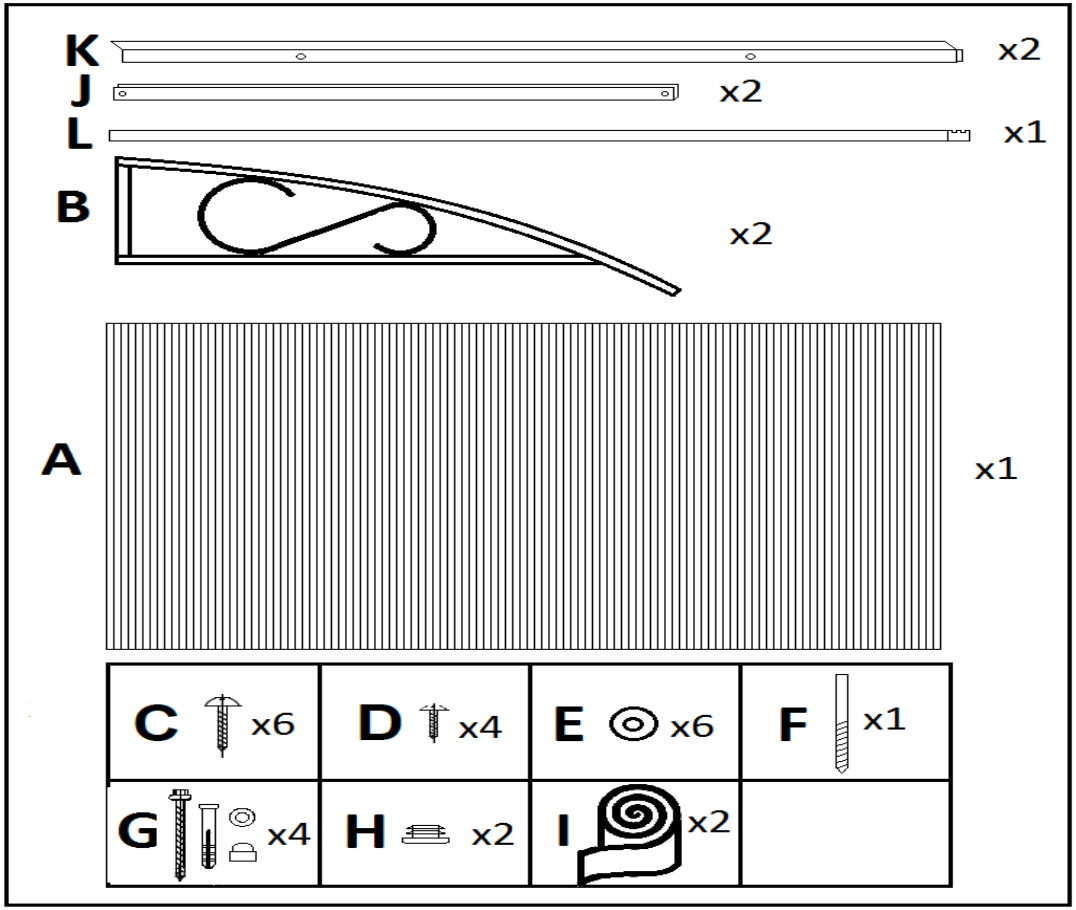
K x2
J x2
L x1
B x2
A x1
C x6
D x4
E x6
F x1
G x4
H x2
I x2

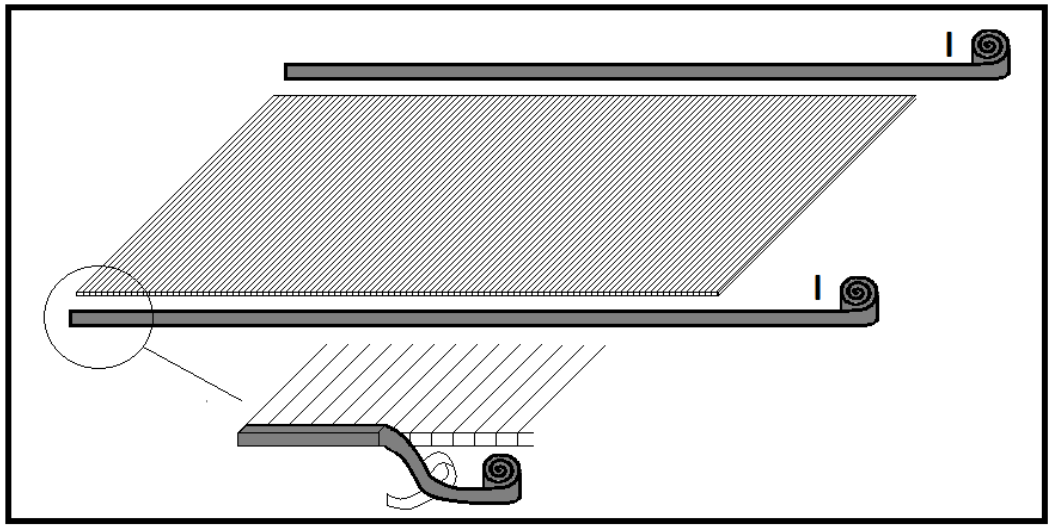
I
I

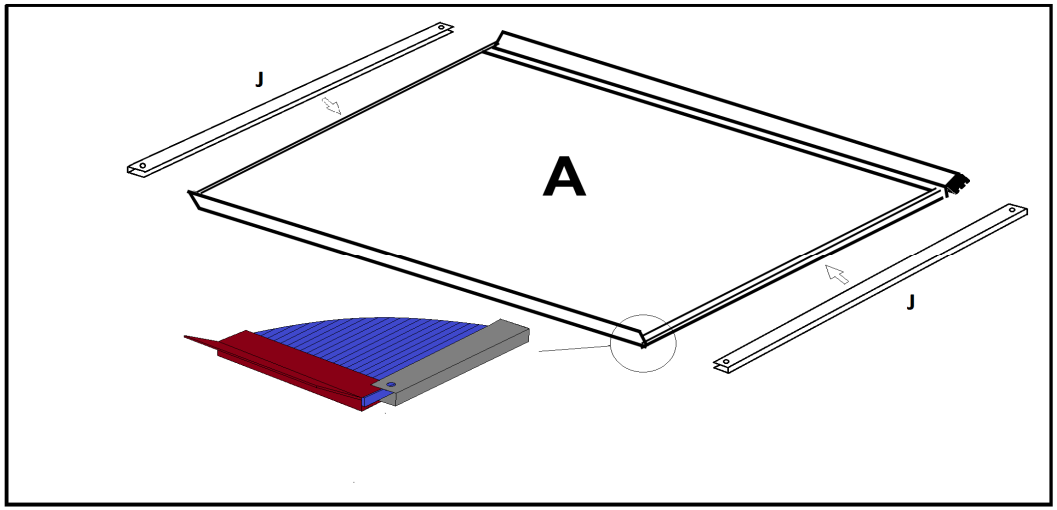
J
A
J

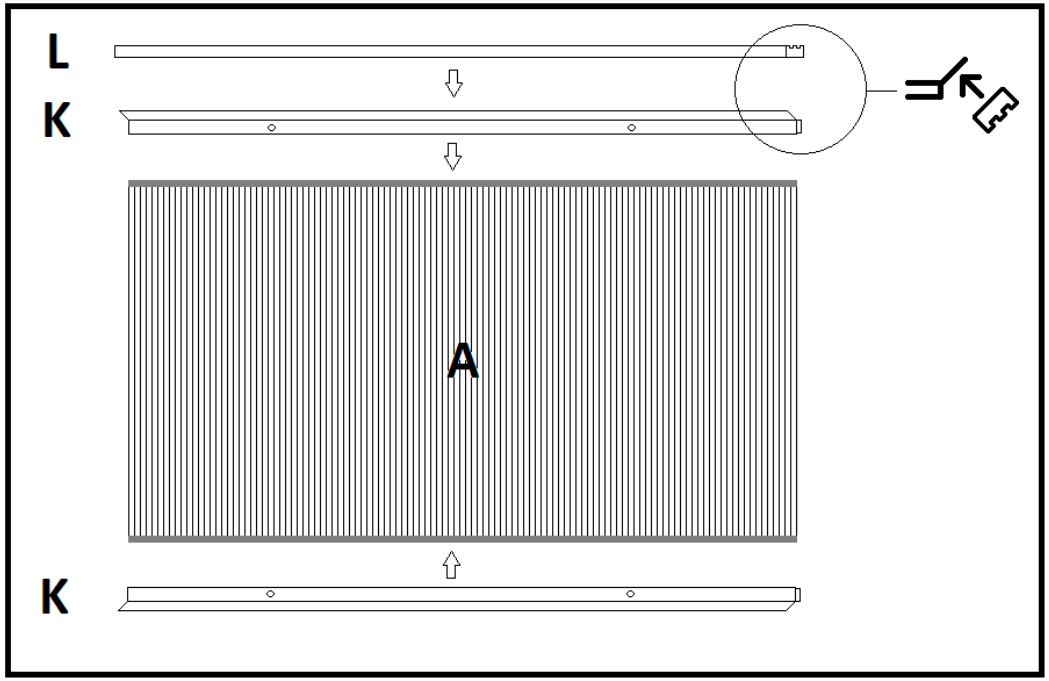
L
K
A
K

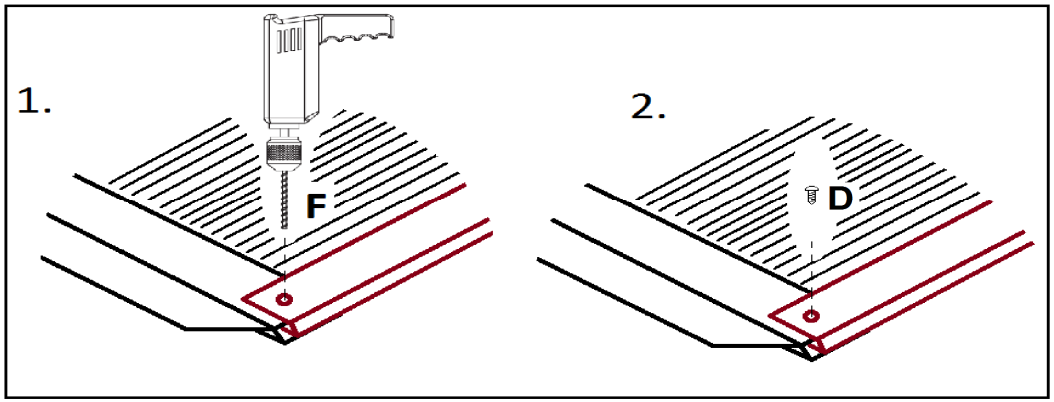
1.
F
2.
D

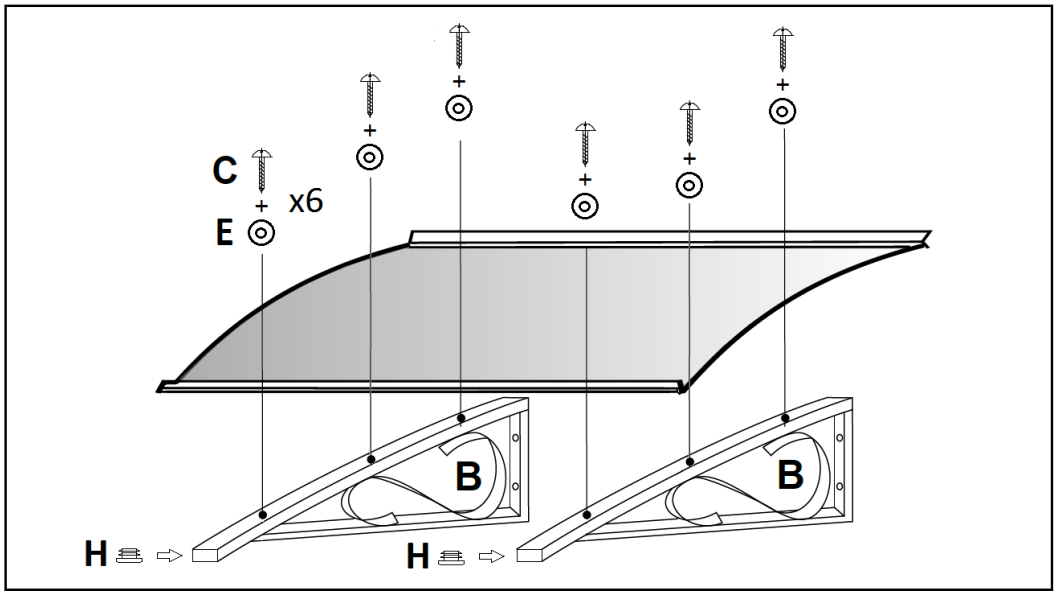
C
x6
E
B
B
H
H